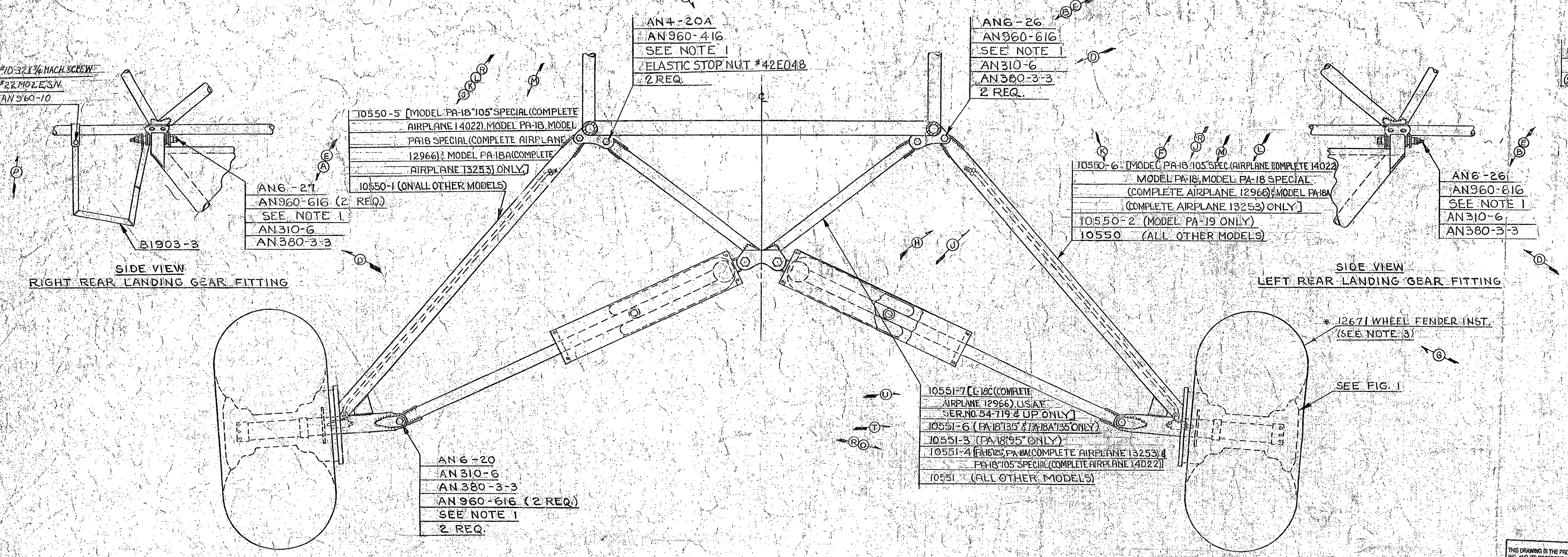
#10-32 X 3/4 MACH. SCREW
#22 MO2 E.S.N.
AN960-10
AN6-27
AN960-616 (2 REQ.)
SEE NOTE 1.
AN310-6
AN380-3-3
81903-3
AN4-20A
AN960-416
SEE NOTE 1
ELASTIC STOP NUT #42E048
2 REQ.
10550-5 [MODEL PA-18 "105" SPECIAL (COMPLETE AIRPLANE 14022), MODEL PA-18, MODEL PA18 SPECIAL (COMPLETE AIRPLANE 12966) & MODEL PA-18A (COMPLETE AIRPLANE 13253) ONLY]
10550-1 (ON ALL OTHER MODELS)
AN6-26
AN960-616
SEE NOTE 1
AN310-6
AN380-3-3
2 REQ.
10550-6 [MODEL PA-18 105 SPEC. (AIRPLANE COMPLETE 14022) MODEL PA-18, MODEL PA-18 SPECIAL (COMPLETE AIRPLANE 12966) & MODEL PA-18A (COMPLETE AIRPLANE 13253) ONLY]
10550-2 (MODEL PA-19 ONLY)
10550 (ALL OTHER MODELS)
AN6-26
AN960-616
SEE NOTE 1
AN310-6
AN380-3-3
* 12671 WHEEL FENDER INST. (SEE NOTE 3)
SEE FIG. 1
10551-7 [L-18C (COMPLETE AIRPLANE 12966) U.S.A.F. SER. NO. 54-719 & UP ONLY]
10551-6 (PA-18 "135" & PA-18A "135" ONLY)
10551-3 (PA-18 "95" ONLY)
10551-4 [PA-18 "125", PA-18A (COMPLETE AIRPLANE 13253) & PA-18 "105" SPECIAL (COMPLETE AIRPLANE 14022)]
10551 (ALL OTHER MODELS)
AN6-20
AN310-6
AN380-3-3
AN960-616 (2 REQ.)
SEE NOTE 1
2 REQ.

SIDE VIEW
RIGHT REAR LANDING GEAR FITTING

SIDE VIEW
LEFT REAR LANDING GEAR FITTING

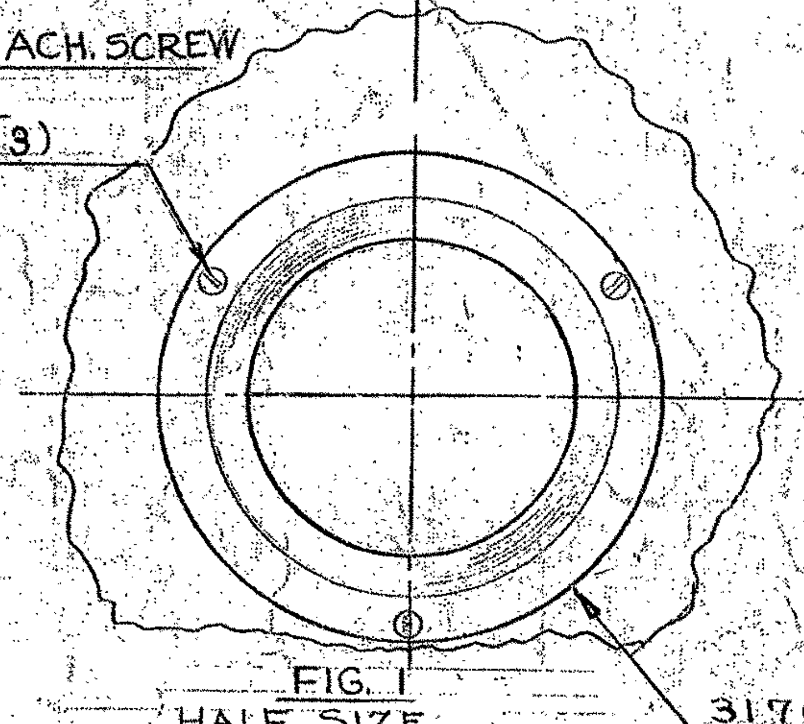
#10-24 MACH. SCREW
3 REQ.
(SEE NOTE 3)
31702 (SEE NOTE 3)

FIG. 1
HALF SIZE
HUB CAP INSTALLATION

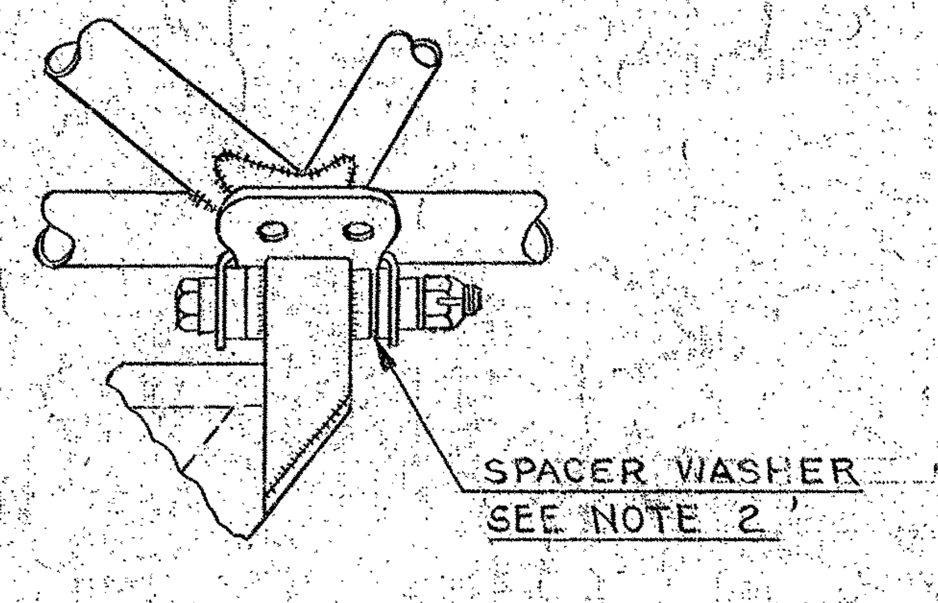
SPACER WASHER
SEE NOTE 2

FIG. 3
HALF SIZE
TYPICAL LANDING GEAR TO FUSELAGE ATTACHMENT

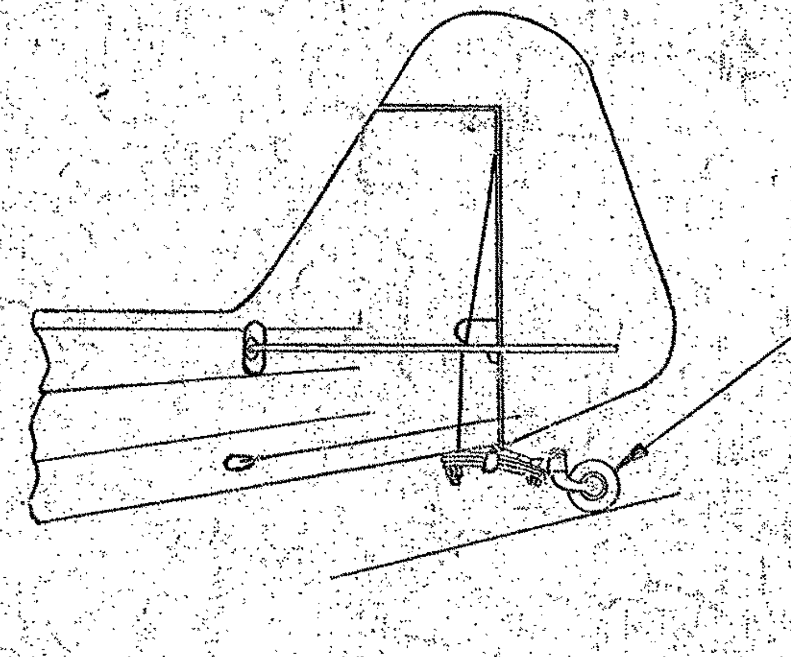
13759 [MODEL PA-18 "125", PA-18 "135", PA-18A "125", PA-18A "135", PA-18 "95" & PA-18 SPECIAL (COMPLETE AIRPLANE 12966 A.F. SERIAL NO. 53-4665 & UP) ONLY]
10030 (ALL OTHER MODELS)

TAIL WHEEL INSTALLATION

NOTES:
1. WASHERS WHERE "SEE NOTE 1" IS INDICATED ARE PACK WASHERS TO BE PLACED UNDER NUT.
2. IF SPACE BETWEEN VEE FITTING AND LANDING GEAR FITTING, ON EITHER SIDE OF VEE FITTING, IS 1/32 OR MORE, INSERT WASHER AN960-616 OR AN960-616L
3. HUB CAP #31702 & ATTACHMENTS NOT USED WHEN WHEEL FENDERS ARE INSTALLED.
* OPTIONAL EQUIPMENT.

THIS DRAWING IS THE PROPERTY OF THE NEW PIPER AIRCRAFT INC. AND ITS POSSESSION BY UNAUTHORIZED PERSONS SHALL NOT BE CONSTRUED AS PERMISSION TO PRODUCE FOR SALE IN WHOLE OR IN PART, ANY DEVICE SHOWN THEREON.

10551-6 10551-3 10551-4 10551	1	CABANE VEE ASSY.	PA-18 "135" & PA-18A "135" ONLY PA-18 "95" ONLY MODEL PA-18 "105" SPECIAL & MODEL PA-18 "125" & PA-18A ALL OTHER MODELS	
13759 10030	1	TAILWHEEL INST.	MODEL PA-18 "125"; PA-18 "135"; PA-18A "125"; PA-18A "135"; PA-18 "95" & PA-18 SPECIAL (COMPLETE AIRPLANE 12966 A.F. SER. NO. 53-4665 & UP) ONLY ALL OTHER MODELS	
10550-5	1	VEE ASSY.	MODEL PA-18 "105" SPECIAL (COMPLETE AIRPLANE 14022) & MODEL PA-18, MODEL PA-18 SPECIAL (COMP. AIRPLANE 12966) & MODEL PA-18A (COMP. AIRPLANE 13253) ONLY	
10550-1		VEE ASSY.	ON ALL OTHER MODELS	
	2	ELASTIC STOP NUT #42E048		
#10-24	6	3/8 LG.	#1010 STL. CD. PLATED RD. HD. MACH. SCREW (SEE NOTE 3)	
AN960-616L AN960-616	SEE NOTE 2	WASHER		
31702	2	HUB CAP (SEE NOTE 3)		
AN960-616	7	WASHER		
AN960-416	2	WASHER		
AN380-3-3	6	COTTER PIN		
AN310-6	6	NUT		
10551-7	1	CABANE VEE ASSY	L-18C (COMPLETE AIRPLANE 12966) U.S.A.F. SER. NO. 54-719 & UP ONLY.	
81903-3	1	STEP ASSY		
AN6-27	1	BOLT		
AN6-26	3	BOLT		
AN6-20	2	BOLT		
AN4-20A	2	BOLT		
	1	ELASTIC STOP NUT #22MO2		
* 12671	1	FENDER INST		
AN960-10	1	WASHER		
10550-6	1	VEE ASSY.	MODEL PA-18 "105" SPECIAL (COMPLETE AIRPLANE 14022), MODEL PA-18, MODEL PA-18 SPECIAL (COMPLETE AIRPLANE 12966) & MODEL PA-18A (COMP. AIRPLANE 13253) ONLY	
10550-2	1	VEE ASSY.	MODEL PA-19 ONLY	
10550		VEE ASSY.	ALL OTHER MODELS	
#10-32	1	3/4 L.	RD. HD. MACH. SCREW	
PART No.	No. REQ.	SIZE	DESCRIPTION	
		MATERIAL		

SCALE 3" = 1'-0" & NOTED | TOTAL WT. — LBS.
FINISH — PIPER SPECIFICATION #10
MANUFACTURING PRACTICES — PIPER SPECIFICATION #9

LET	REVISION	DATE	BY
V	AN960-616L WAS 85012-12	10-26-55	HMK
U	10551-7 ADDED	12-7-53	IEM
T	10551-6 ADDED 10551-3 MADE STANDARD FOR PA-18 "95"	7-22-53	I.E.M.
S	MODEL PA-18 SPECIAL (COMPLETE AIRPLANE 12966 SER. # 53-4665 & UP ADDED TO 13759	5-15-53	I.M.M.
R	MODEL PA-18 "105" SPECIAL ADDED TO 10550-6, 10550-5 & 10551-4	9-24-52	MGS
Q	PA-18 "125" & PA-18A "125" ADDED	6-4-52	HMK
P	81903-3 ATTACH. CHANGED	5-4-52	HMK
O	10551-4 ADDED	4-30-52	HMK
N	13759 & MODEL REF. ADDED	[illegible]-14-52	HMK
M	ADDED PA-18A (COMP. AIRPLANE 13253)	1-4?-51	I.E.M.

LET	REVISION	DATE	BY
L	ON MODEL PA-18 SPEC. (COMPLETE AIRPLANE 12966) 10550-6 WAS 10550 & 10550-5 WAS 10550-1	5-7-51	HRK
K	10550-5 WAS 10550-3; 10550-6 WAS 10550-4	1-26-50	HRK
J	10550-3, 10550-4 ADD.; 10551 WAS 10551-2	8-15-50	FCS
H	10551-2 (OPT.) ADDED	3-3-50	HRK
G	12671 ADDED (OPT.) NOTE 3 ADDED	1-2?-50	K.D.
F	10550-2 ADDED	6-22-49	R.R.
E	AN6-26 WAS AN6-26A AN6-27 WAS AN6-27A	3-6-47	CEK
D	[illegible] AN380-3-3 ADDED	2-24-47	CEK
C	ELASTIC STOP NUT #42E048 [illegible]	2-24-47	CEK
B	AN6-26A WAS AN6-26	1-2-47	I.M.
A	AN4-20A WAS AN4-20 AN6-27A WAS AN6-27	1-2-47	I.M.

THIS DRAWING IS THE PROPERTY OF THE PIPER AIRCRAFT CORP. AND ITS POSSESSION BY UNAUTHORIZED PERSONS SHALL NOT BE CONSTRUED AS PERMISSION TO REPRODUCE FOR SALE, IN WHOLE OR IN PART, ANY DEVICES SHOWN THEREON.

MODEL	PER PLANE	NEXT ASSEMBLY	SUPERSEDES	SUP. BY
PA-11				

PIPER AIRCRAFT CORP.
LOCK HAVEN, PENNA.

GEAR INSTALLATION - LANDING

DRAFTSMAN	CHECKER	STANDARDS	
J.E.H. 4-5-46	C.E.K. 4-9-46		10534